Model:FLRA

Dimensions in "mm"

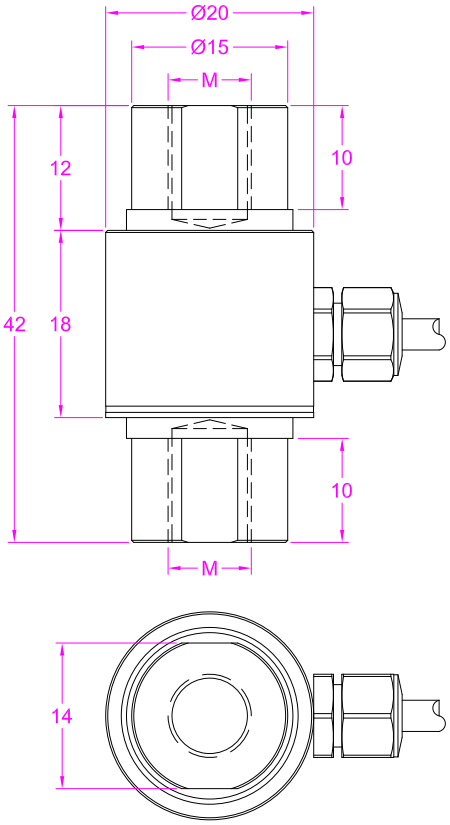

Load direction
加载方向

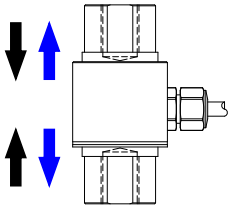

Ordering code

FLRA - 500N - M5

Model | Capacity | M4/M5/M6/M8/M10

Capacity(N)	M
100/200/500	M4*0.7 Dep 8
100/200/500/1k	M5*0.8 Dep 8
100/200/500/1k/2k	M6*1 Dep 10
100/200/500/1k/2k/5k	M8*1.25 Dep 10
100/200/500/1k/2k/5k/10k	M10*1.5 Dep10

Wiring Diagram

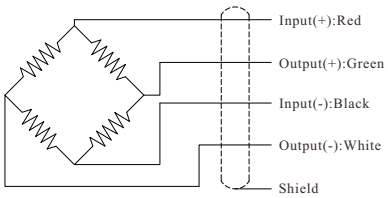

--- Specifications / 规格参数 ---

Capacity/量程	100/200/500/1k/2k/5k/10k N		
Rated Output 额定输出	1.5 mV/V	Compensated Temp. 温度补偿范围	0...+40°C
Excitation 激励电压	3~12V	Operating Temp. 工作温度范围	−20...+60°C
Zero Balance 零点输出	±0.05 mV/V	Temp. Shift Zero 零点温度漂移	±0.02% of R.O./°C
Nonlinearity 非线性	±0.1% of R.O. ≥5kN: ±0.3% of R.O.	Temp. Shift Span 灵敏度温度漂移	±0.02% of R.O./°C
Hysteresis 滞后	±0.1% of R.O. ≥5kN: ±0.3% of R.O.	Input Resistance 输入阻抗	350±30Ω
Nonrepeatability 非重复性	±0.05% of R.O. ≥5kN: ±0.1% of R.O.	Output Resistance 输出阻抗	350±10Ω
Creep(3min) 蠕变(3min)	±0.05% of R.O.	Insulation Resistance 绝缘阻抗	>2000MΩ(50V)
Safe Overload 安全过载	150% of F.S.	Ingress Protection 防护等级	IP62
Ultimate Overload 极限过载	200% of F.S.	Material of Element 弹性体材料	Stainless steel 不锈钢
Cable 导线	Ø3*2000mm 4-core shielded cable Ø3*2000mm 4芯屏蔽线		
R.O.=Rated Output/额定输出 F.S.=Full Scale/满量程			

• Subject to change without notice / 如有更改,不另行通知